activTek™
INDUCT 5000

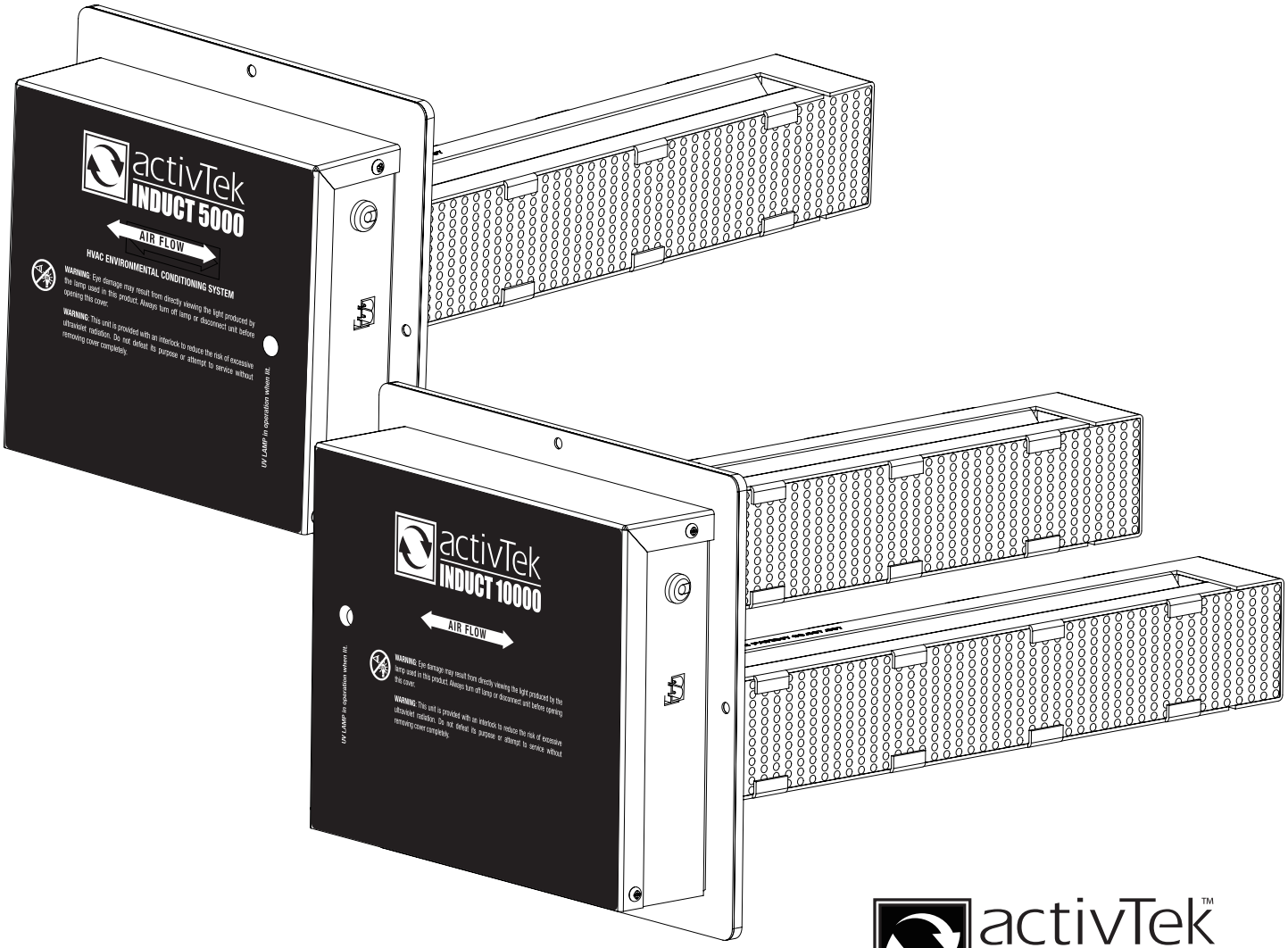

activTek™
INDUCT 10000

DUCT MOUNTED AIR & SURFACE PURIFICATION SYSTEMS WITH RELAY PORT

READ MANUAL CAREFULLY FOR PROPER USE AND OPTIMAL OPERATION.

GENERAL INFORMATION

PRODUCT OVERVIEW

Congratulations on your purchase of the Induct 5000 or 10000 air purification enhancement system with Relay Port! These units are easily mounted into the supply side of air conditioning and heating system air ducts by an electrician or HVAC professional, where it will provide around-the-clock air purification and surface decontamination while the HVAC system is running. Please read and follow all safety warnings and instructions outlined in this manual before installing or performing maintenance.

CONTENTS

Product Overview 2
Specifications 2
Storage and Disposal 2
Important Safety Instructions 3
For Canadian Customers Only 4
Product Features 5
Installation Hardware (Supplied) 6
Recommended Installation Tools 6
Installation Requirements 6
Electrical Requirements 7
Communication Connection 8
Installing the Unit 8
Wiring the Unit 11
Maintenance/UV Bulb Indicator 11
Replacing the activTek® Cell Assembly 12
Replacing the Ballast 14
Replacement Parts & Service 16
Warranty Information 17
FCC Declaration & Responsible Party 18

FILL IN AND SAVE

Record information regarding your new Induct 5000 or 10000 w/ Relay Port here. Retain for future reference.

Model No. _____

Serial No. _____

Date of Purchase _____

Sales Representative:

Name _____

Phone No. _____

Address _____

STORAGE AND DISPOSAL

Do not dispose of this product as household waste. Electrical waste and electronic products should be appropriately recycled as required by practices established by your local authority.

SPECIFICATIONS

Induct 5000 w/ Relay Port (No Ozone)
- **Sales Number:** 9960059
- **Model Number:** A1024D

Induct 10000 w/ Relay Port (No Ozone)
- **Sales Number:** 9960058
- **Model Number:** A1025E

Meets California ozone emissions limit.
CARB Certified.
Certified to UL 2998.

Technology:
ActivePure Technology - 14” Cell Assembly

Electrical:
- Input Voltage: 120-277 Volts; 50/60 Hz
- Current: 0.30 Amps (5000), 0.54 Amps (10000)
- Power: 20 Watts (5000), 37 Watts (10000)

Mechanical:
- Distribution via Air Handler
- Safety Switch Installed

Safety:
- Conforms to UL 1995

Weight & Dimensions:
- 4 lbs (1.81 kg) (5000), 8 lbs (3.6 kg) (10000)
- 9” H x 9” W x 17” D (5000) (22.9 cm x 22.9 cm x 43.2 cm)
- 11” H x 11” W x 17”D (10000) (27.9 cm x 27.9 cm x 43.2 cm)

Operating Temperature:
- 34˚F to 200˚F (1.1 ˚C – 93.3 ˚C)

Coverage:

Induct 5000
- Residential not to exceed 3,500 sq. ft. (325 m^2). High Density Commercial not to exceed 1,250 sq. ft. (116 m^2).

Induct 10000
- Residential not to exceed 5,000 sq. ft. (465 m^2). High Density Commercial not to exceed 2,500 sq. ft. (232 m^2).

Warranty:
- Limited 5 Year Warranty

We reserve the right to change or modify any specification without notice.

1. Recommended ceiling height to not exceed 10 feet. Solutions should be customized based upon a variety of factors including HVAC system capabilities and settings, air flows taking into account walls, air pressure, and doors, ambient air temperatures and humidities, variable occupant density, known VOC concentrations, and other layers of protection.

EPA Est. 104008-VA-1

CLASSIFIED C UL US E518921

RoHS COMPLIANT

UK CA

If you have any questions regarding the use of this product, please contact your Sales Representative or Customer Service at 866.736.0503 or email aessupport@activepure.com.

IMPORTANT SAFETY INSTRUCTIONS

WARNING

- **UV Light in operation; DO NOT operate unless the unit is completely and correctly assembled; failure to follow warnings may result in severe eye damage and electrical shock**
- **To prevent damage to the unit, operating environment temperature must never exceed 200°F (93.3 °C)**
- **To reduce the risk of electric shock, this equipment may have a grounding type plug that has a third (grounding) pin; this plug will only fit into a grounding type power outlet; if the plug does not fit into the outlet, contact qualified personnel to install the proper outlet; DO NOT alter the plug in any way**
- **This unit is equipped with a universal ballast that operates at nominal voltages between 100 and 277 Volts, 50/60 Hz**
- **To Reduce the Risk of Electric Shock – DO NOT use in wet or damp locations; this equipment emits UV-C radiation; DO NOT locate equipment in any location allowing direct line-of-sight to vents, returns, or other duct openings**
- **DO NOT use this unit with an extension cord**

CAUTION

- **Wiring and installation of this unit must be done by a licensed HVAC contractor or electrician; failure to do so will void warranty of the product**
- **When the unit is installed in a roof mounted HVAC system, the unit must be protected from the elements**
- **The Induct 5000 and 10000 require power 24/7; DO NOT install where power to the unit will be cycled on and off**

Location for Protective Earth Line.

Read this manual in its entirety before using your Induct 5000 or 10000.

Keep out of the reach of children.

- Live voltage may be present
- Disconnect power at the breaker or fuse panel before servicing unit; always follow OSHA lockout procedures to prevent accidental exposure to electrical energy
- If installed near a furnace or where emergency heat coils could raise the temperature inside the plenum, cycle the AC unit through the heating cycles assuring that the temperature never exceeds 200°F (93.3 °C); the ActivePure Cell Assembly must not exceed 200°F (93.3 °C)
- If the unit is hard wired, be sure the power to the unit is off; always follow OSHA electrical lockout safety requirements to prevent accidental release of energy during service or maintenance activities
- Never attempt to check operation of the ActivePure Cell Assembly by direct observation; severe eye damage can result; use the indicator lamps on the bottom of the ballast only

SAVE THESE INSTRUCTIONS

FOR CANADIAN CUSTOMERS ONLY

INDUCT 5000 OR 10000 W/ RELAY PORT

Sales No. : 9960059 (Induct 5000)
Sales No. : 9960058 (Induct 10000)

This UV device helps reduce the spread of viruses in the air.
Keep out of the reach of children.
Please read the label and owner's manual before using: activTek.net/manuals

PRECAUTIONS:

WARNING: UV light source. Disconnect power before servicing. Unintended use of the device, or damage to the housing, may result in exposure to ultraviolet radiation. Ultraviolet radiation may cause eye and skin irritation. Avoid exposing eyes and skin to ultraviolet radiation.

FIRST AID INSTRUCTIONS: Please contact your healthcare provider in the event of injury caused by this device.

DIRECTIONS FOR USE:

Unit should be installed after the air handler in the HVAC system by a licensed HVAC contractor or electrician. Please see this manual for detailed instructions on using, handling, storing and disposing of the device, and procedures to mitigate any associated risks.

The use of this device is a supplement to and not a substitute for standard infection control practices; users must continue to follow all current infection control practices, including those related to the cleaning and disinfection of environmental surfaces.

FOR INQUIRIES CONTACT:

AERUS CANADA, INC.
Laird Business Park
3480 Laird Road, Units 2–5
Mississauga, Ontario, Canada, L5L 5Y4

W. Parrell, Manager
(905) 569-9399
wparrell@aerusonline.com

Aerus Canada, Inc. is affiliated with ActivePure Manufacturing, LLC
1300 Valley Dr. Bristol, VA 24201

PRODUCT FEATURES

It is important to be familiar with the parts of the Induct 5000 or 10000 w/ Relay Port. If any parts are missing, please contact your Sales Representative or Customer Service at 866.763.0506 or email aessupport@activepure.com.

Induct 5000 w/ Relay Port

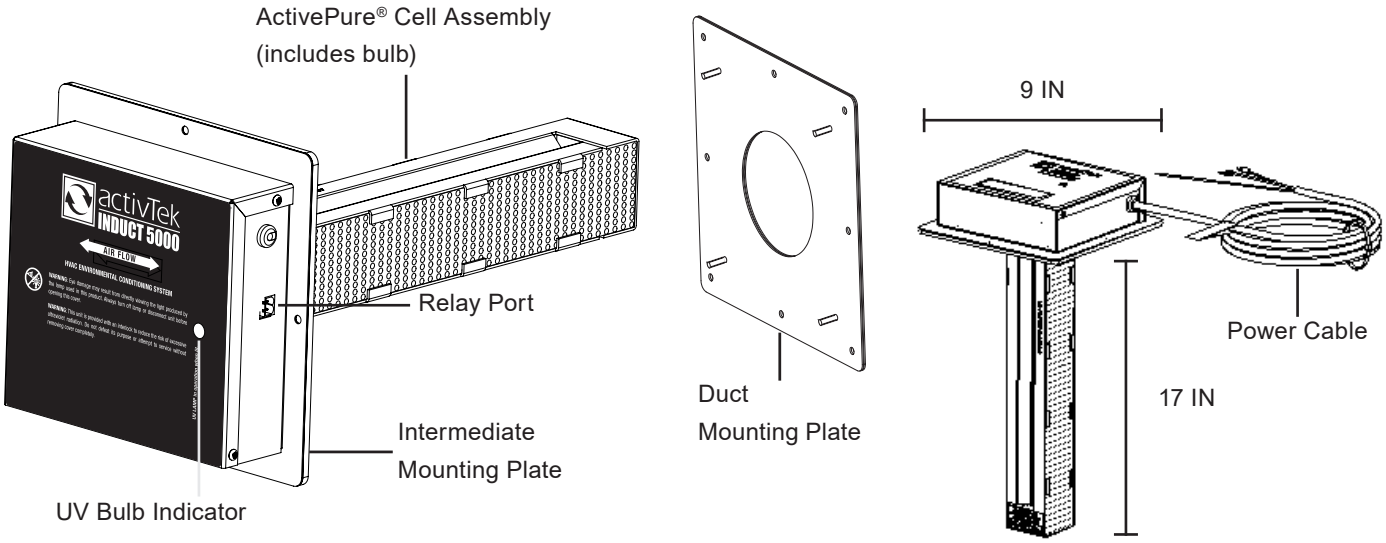

Induct 10000 w/ Relay Port

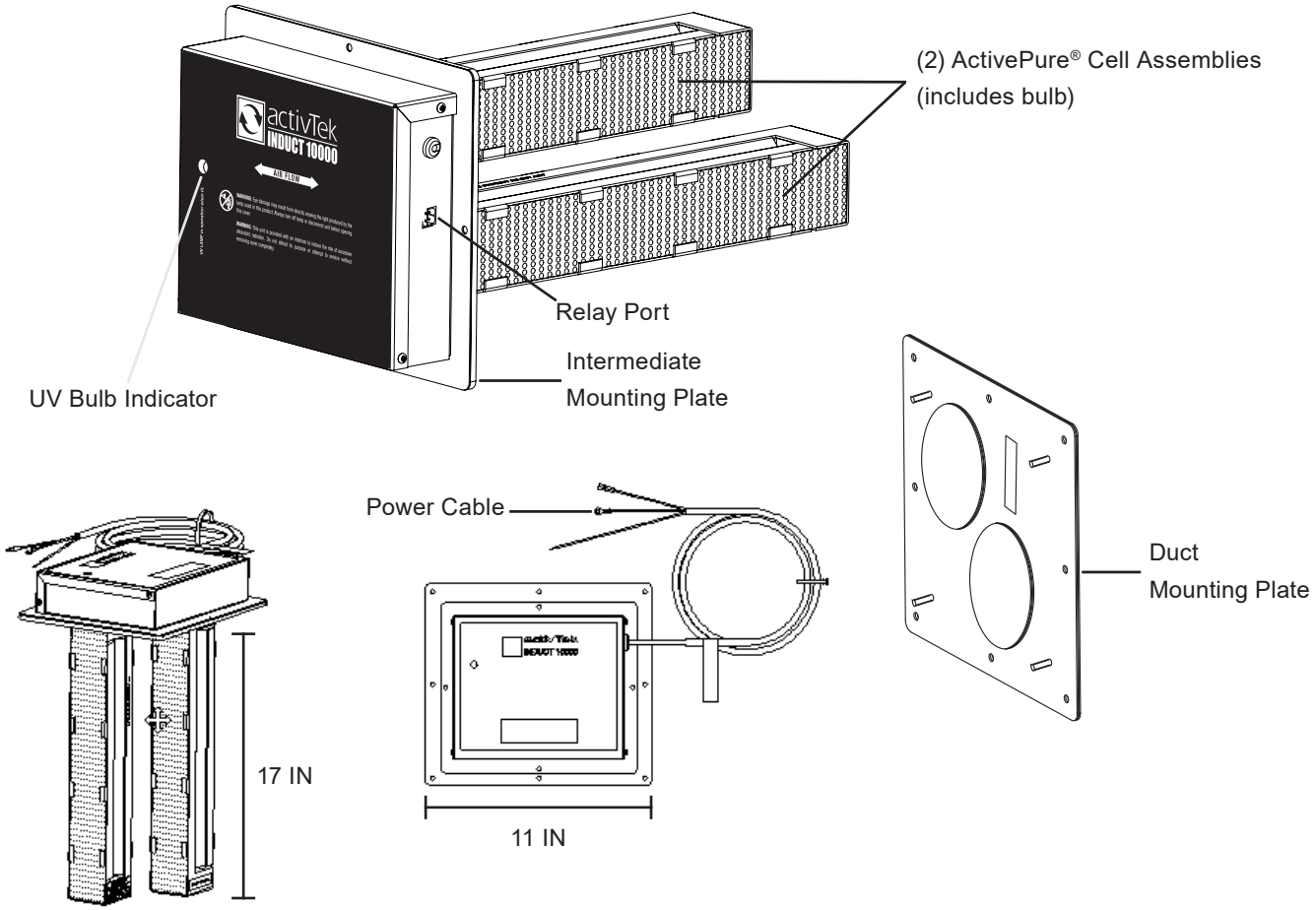

INSTALLATION HARDWARE (SUPPLIED)

(8) #8 — .75
1/4" Self-tapping screws

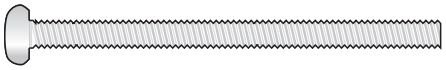

(4) #6 — 32 x 2” Threaded bolts

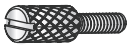

(2) Thumb screws

(4) Thumb nuts

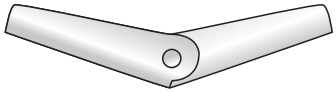

(4) #6 — 32 Toggle bolt wall anchors

RECOMMENDED INSTALLATION TOOLS

CAUTION

When the unit is installed in a roof mounted HVAC system, the unit must be protected from elements.

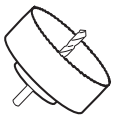

3 1/2" Hole Saw
4” Hole Saw
(for wood or metal)

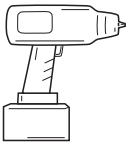

Drill / Power Driver

Phillips Screwdriver

3/8" Drill Bit
(if installing into fiberglass ducting with toggle bolts)

1/4" Nut Driver Bit

YOU MAY ALSO NEED:

Utility Knife

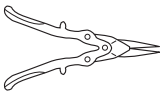

Tin Snips
(for metal ductwork)

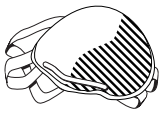

Dust Mask

INSTALLATION REQUIREMENTS

WARNING

If installed near a furnace or where emergency heat coils could raise the temperature inside the plenum, cycle the AC unit through the heating cycles assuring that the temperature never exceeds 200°F (93.3 °C). The ActivePure® Cell Assembly must not exceed 200°F (93.3 °C).

CAUTION

- **This unit must be installed by a licensed HVAC contractor or electrician; failure to do so will void warranty of the product**
- **When the unit is installed in a roof mounted HVAC system, the unit must be protected from the elements**
- **The Induct 5000 and 10000 w/ Relay Port require power 24/7; DO NOT install where power to the unit will be cycled on and off**

INSTALLATION REQUIREMENTS (CONTINUED)

1. Unit should be installed after the air handler in the HVAC system.

2. The ductwork around the installation area should be clean and dry to ensure proper adhesion of the gasket materials and any tape used.

3. When installing near a furnace or heating coils, run the heating system through the heating cycles to ensure the temperature of the Induct unit does not exceed 200˚F (93.3 °C).

4. Depending on the model, one opening (Induct 5000) or two openings (Induct 10000) approximately 4” (four inches) (10.16 cm) in diameter will need to be cut.

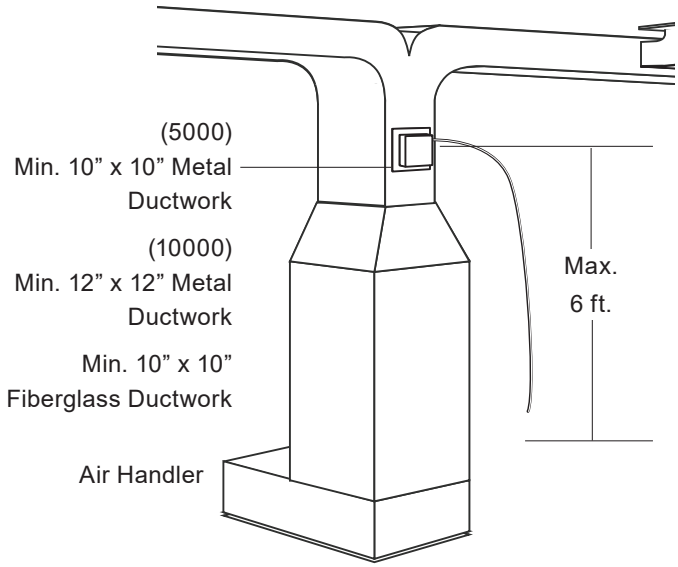

Installation Clearance

ELECTRICAL REQUIREMENTS

WARNING

- **To Reduce the Risk of Electric Shock – DO NOT use in wet or damp locations; this equipment emits UV-C radiation; Do not locate equipment in any location allowing direct line-of-sight to vents, returns, or other duct openings**
- **Disconnect from supply before servicing or replacing**
- **These units are equipped with a universal ballast that operates at nominal voltages between 100 and 277 Volts, 50/60 Hz**

CAUTION

- **Disconnect power at the breaker or fuse panel before servicing unit; always follow OSHA lockout procedures to prevent accidental exposure to electrical energy**
- **Wiring of the unit into your HVAC system should be done by a licensed HVAC installer or electrical contractor only**
- **The Induct 5000 and 10000 w/ Relay Port require power 24/7; DO NOT install where power to the unit will be cycled on and off**

Electrical Requirements for 120 volt installation only

- Use of an extension cord is not recommended due to safety considerations.
- Hardwiring Requirements (All units)

NOTE: All units come standard with a blunt cord.

120 Volt Domestic Unit:		240 Volt Commercial Unit:		230/240 Volt International Unit:	
Black Wire	L1	Black Wire	L1	Brown Wire	L1
White Wire	Neutral	White Wire	L2	Blue Wire	L2
Green Wire	Ground	Green Wire	Ground	Green with Yellow Stripe	Ground

COMMUNICATION CONNECTION

This Induct 5000 and 10000 provide an dry-contact relay port for optional remote monitoring of cell operation. Contacts are closed during normal operation and open if there is an interruption in operation.

Maximum contact rating = 250V AC / 8A. (See port location on Page 4)

NOTE: Relay Port is an industry-standard pluggable terminal block type with 2-position, 0.2” (5.08mm) pitch.

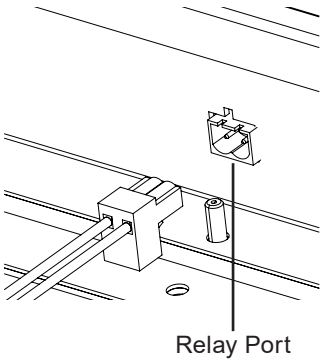

INSTALLING THE UNIT

WARNING

- **To Reduce the Risk of Electric Shock – DO NOT use in wet or damp locations; this equipment emits UV-C radiation; DO NOT locate equipment in any location allowing direct line-of-sight to vents, returns, or other duct openings**
- **Disconnect from supply before servicing or replacing**

CAUTION

- **Hard wiring unit into HVAC system must be done by a licensed HVAC installer or electrical contractor only**
- **When the unit is installed in a roof mounted HVAC system, the unit must be protected from elements**
- **The Induct 5000 and 10000 w/ Relay Port require power 24/7; DO NOT install where power to the unit will be cycled on and off**

Find the optimal position downstream from the air handler. Ensure location in duct has enough room for the Duct Mounting Plate. It is recommended for maximum effectiveness that the unit be placed as close to the air handler as possible.

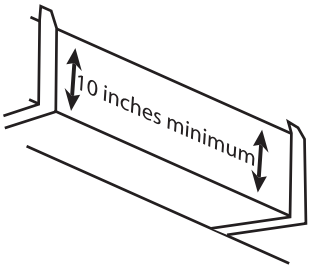

1. Locate suitable area of duct for installation.

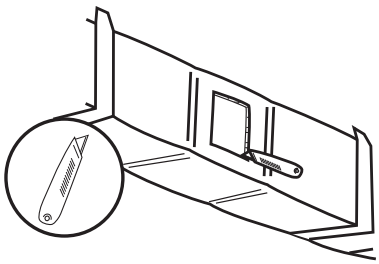

2. Cut away insulation to expose metal duct (if needed).

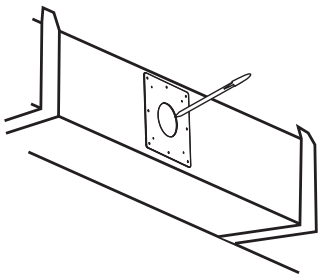

3. Mark location for 3.5" opening using the Duct Mounting Plate.

INSTALLING THE UNIT (CONTINUED)

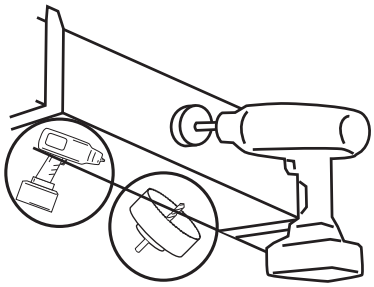

4. Cut hole in duct using 3.5" hole saw.

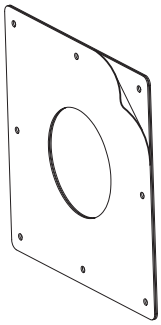

5. Remove backing from Duct Mounting Plate adhesive gasket.

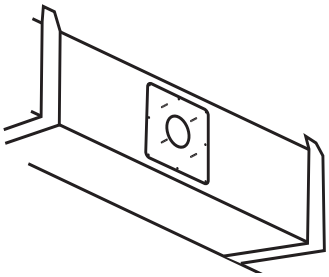

6. Center openings and press Duct Mounting Plate onto duct. The adhesive gasket will hold the Duct Mounting Plate in place.

ALTERNATE CUTTING METHOD:

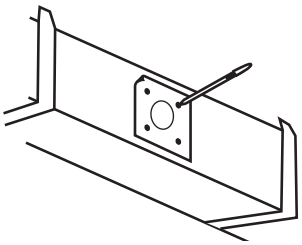

a. Using the Duct Mounting Plate, mark four cutting method holes on duct.

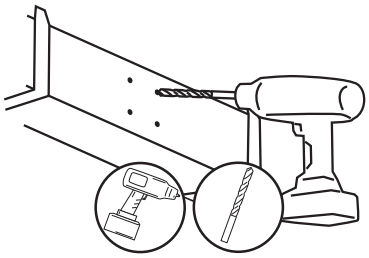

b. Drill four holes where marked.

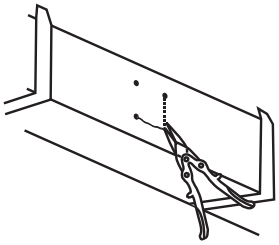

c. Cut between holes using tin snips.

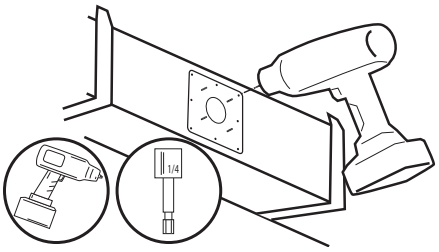

7. Secure the Duct Mounting Plate using (8) #8 self-tapping screws.

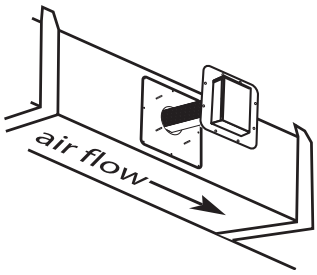

8. Insert unit into opening. Be sure the air will pass though the ActivePure Cell Assembly.

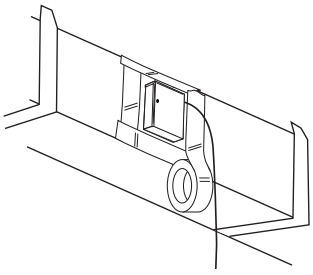

9. Unit may be taped with aluminum HVAC tape to provide complete seal.

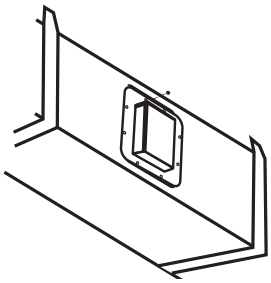

10. Secure the unit to the Duct Mounting Plate with (4) thumb nuts.

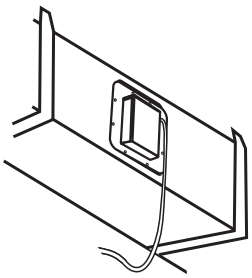

11. Plug unit into working power receptacle.

Induct 10000 w/ Relay Port:

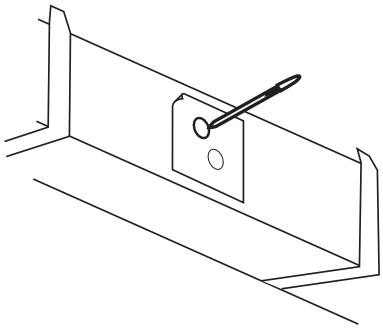

a. Using the Duct Mounting Plate as a template, mark the location for installation.

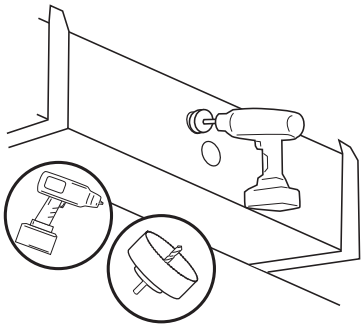

b. Using a 4” (4 inch) hole saw, cut opening(s) into duct work.

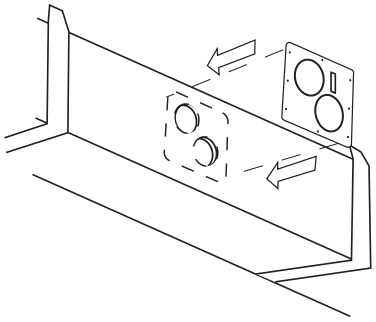

c. Place the Duct Mounting Plate squarely into place and fasten to duct work with sheet metal screws.

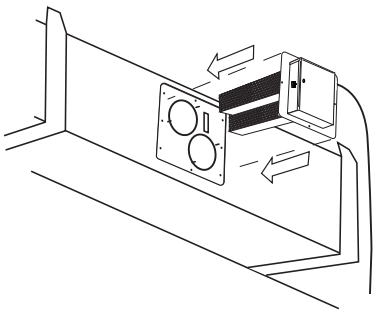

d. Move ballast assembly to location and secure to duct work with the four (4) thumb screws provided.

For questions about installation, please contact your Sales Representative or Customer Service at 866.763.0503 or email aessupport@activepure.com.

WIRING THE UNIT

WARNING

- **To Reduce the Risk of Electric Shock – DO NOT use in wet or damp locations; this equipment emits UV-C radiation; Do not locate equipment in any location allowing direct line-of-sight to vents, returns, or other duct openings; disconnect from supply before servicing or replacing**
- **This unit is equipped with a universal ballast that operates at nominal voltages between 100 and 277 Volts, 50/60 Hz**

CAUTION

- **Disconnect power at the breaker or fuse panel before servicing unit; always follow OSHA lockout procedures to prevent accidental exposure to electrical energy**
- **Wiring of the unit into your HVAC system should be done by a licensed HVAC installer or electrical contractor only**
- **The Induct 5000 and 10000 w/ Relay Port require power 24/7; DO NOT install where power to the unit will be cycled on and off**

1. Connect wires coming from the Induct 5000 or 10000 unit as follows:

120 Volt Domestic Unit:		240 Volt Commercial Unit:		230/240 Volt International Unit:	
Black Wire	L1	Black Wire	L1	Brown Wire	L1
White Wire	Neutral	White Wire	L2	Blue Wire	L2
Green Wire	Ground	Green Wire	Ground	Green with Yellow Stripe	Ground

2. Be sure to ground the ballast by securing the unit to the metal surface of the AC unit or power box.
3. Check indicator light for proper operation with fan on.

NOTE: All units come standard with a blunt cord.

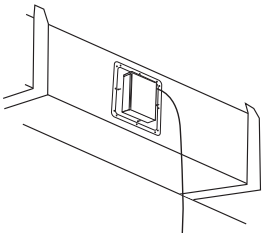

MAINTENANCE/UV BULB INDICATOR

CAUTION

For optimal performance and to maintain the Limited 5 year warranty, it is required to replace the ActivePure® Cell Assembly once every (12) months, even if the UV Bulb appears to be operating normally.

Your Induct 5000 and 10000 w/ Relay Port unit require no periodic maintenance beyond normal replacement of the ActivePure® Cell Assembly every (12) months. See full details in Warranty section on Page 18.

The UV Bulb Indicator on the face of the unit will glow when the UV Bulb is in use. If the indicator does not glow and the unit has power, the ActivePure® Cell Assembly should be replaced.

UV Bulb Indicator

REPLACING THE ACTIVEPURE® CELL ASSEMBLY

WARNING

- **UV Light in operation; disconnect unit from power cord before servicing; failure to follow warnings may result in severe eye damage**
- **If the unit is hard wired, be sure the power to the unit is off**
- **Always follow OSHA electrical lockout safety requirements to prevent accidental release of energy during service or maintenance activities**

CAUTION

For optimal performance and to maintain the Limited 5 year warranty, it is required to replace the ActivePure® Cell Assembly once every (12) months, even if the UV Bulb appears to be operating normally.

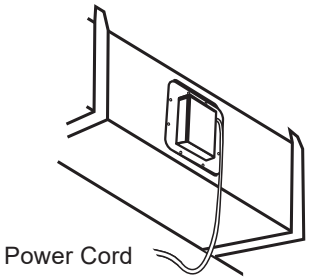

1. Disconnect (unplug) power cord from unit.

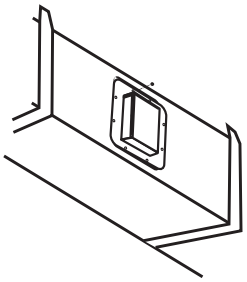

2. Remove the (4) thumb nuts.

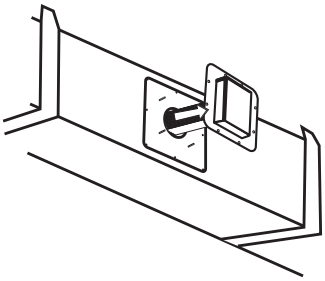

3. Remove the unit from the Duct Mounting Plate.

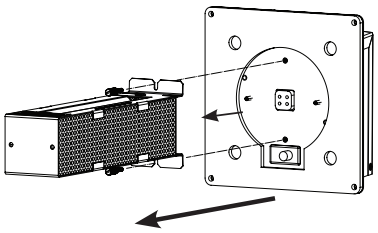

4. Remove the two thumb screws holding the ActivePure Cell Assembly.

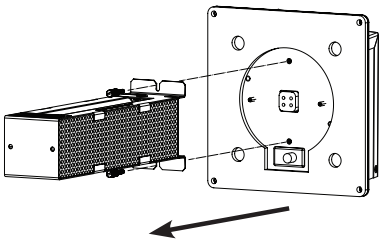

5. Remove the used ActivePure Cell Assembly from the base unit and dispose of the ActivePure Cell Assembly properly.

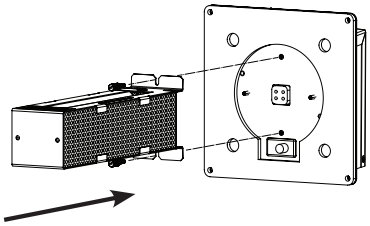

6. Plug the new ActivePure Cell Assembly into the base unit. Be sure Air Flow / Honeycomb Cell direction is correct.

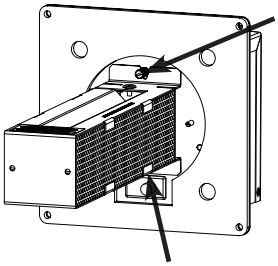

7. Secure with (2) thumb screws.

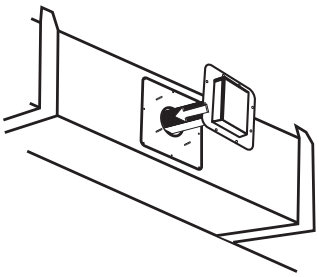

8. Insert the unit into the Duct Mounting Plate.

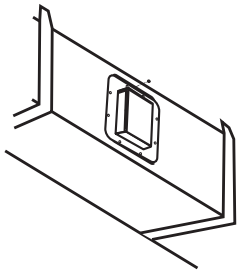

9. Secure unit with (4) thumb nuts.

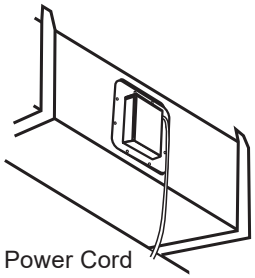

10. Reconnect power supply.

Induct 10000 w/ Relay Port:

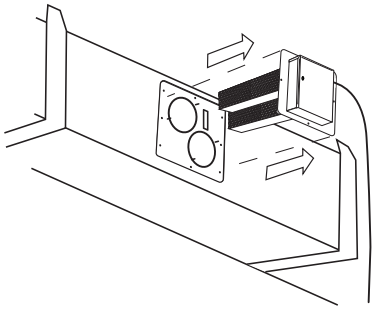

a. Remove the Induct 10000 w/ Relay Port by removing the four (4) thumb screws and sliding the unit out.

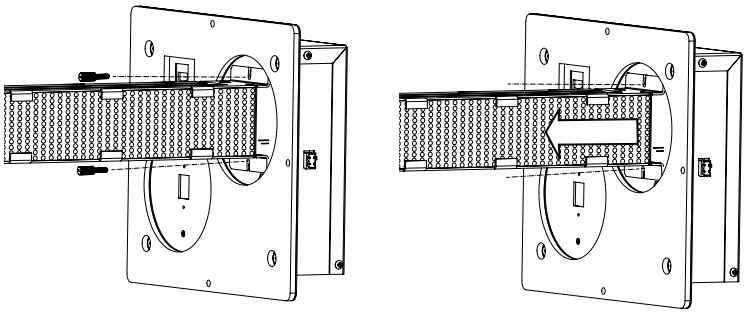

b. Remove the thumb screws on either side of the ActivePure® Cell Assembly to remove the ActivePure Cell Assembly from the unit.

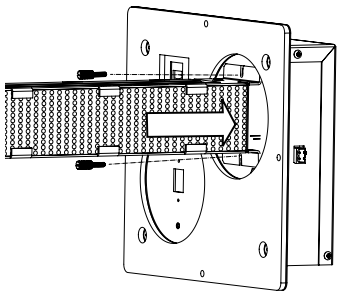

c. Replace ActivePure® Cell Assembly by reversing steps a-c.

Visit lamprecycle.org for proper bulb disposal regulations

REPLACING THE BALLAST

WARNING

- **Never attempt to check operation of the ActivePure® Cell Assemblies by direct observation; severe eye damage can result; use the indicator lamps on the bottom of the ballast only**
- **Disconnect power at the breaker or fuse panel before servicing unit; always follow OSHA lockout procedures to prevent accidental exposure to electrical energy; release of energy during service or maintenance activities**

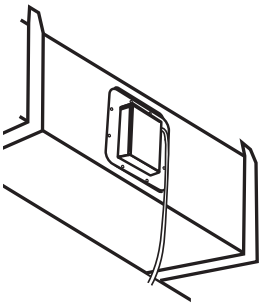

Power Cord

1. Disconnect (unplug) Power Cord from unit.

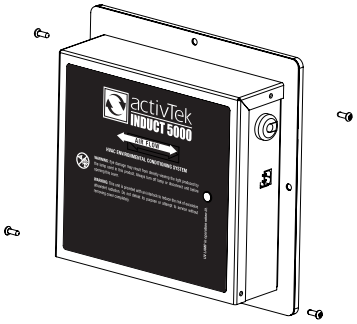

2. Open the Cover of the unit by removing the four (4) thumb screws then remove the cover.

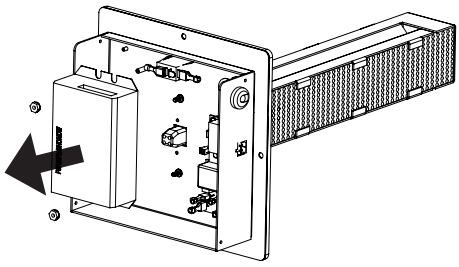

3. Remove the two (2) thumb nuts on the top and bottom side of the Ballast to pull Ballast from unit.

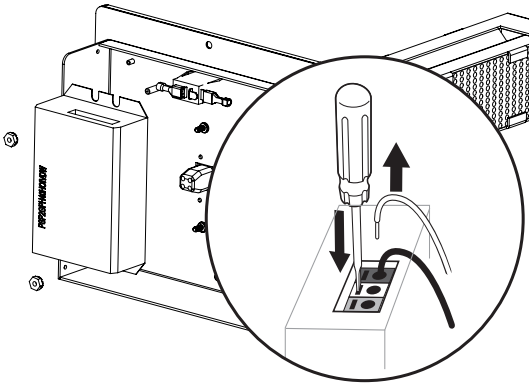

4. Remove the wires from Ballast by pressing a small screwdriver into the wire release.
   - INDUCT 5000 - 6 wires
   - INDUCT 10000 - 8 wires

REPLACING THE BALLAST (CONTINUED)

5. To reconnect wiring, insert wire into the corresponding color connector. Gently pull back after inserting wire to ensure the wire is properly locked into place.

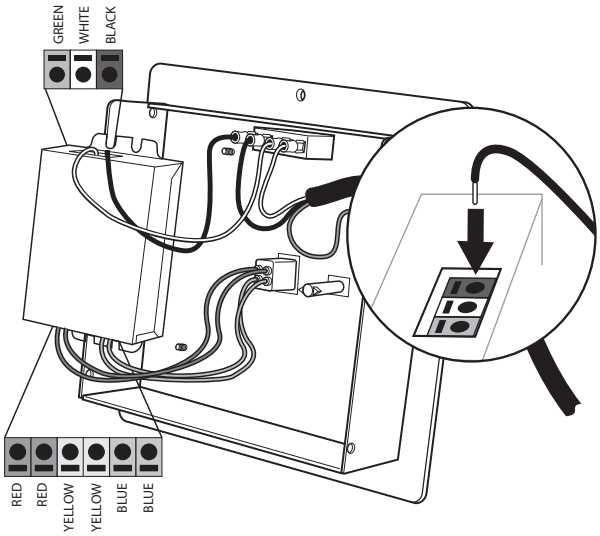

UPPER (3 terminals)

- Black power wire in **BLACK**
- White power wire in **WHITE**
- **GREEN** is not used

LOWER (6 terminals)

- 2 Red wires in **RED**
- 2 Blue wires in BLUE **(INDUCT 10000 ONLY)**
- 2 Yellow wires in YELLOW

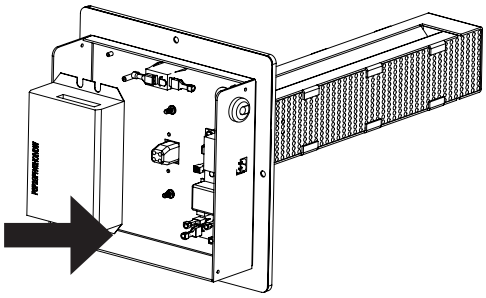

6. Place new Ballast into original location and secure using the two (2) nuts removed in step 4.

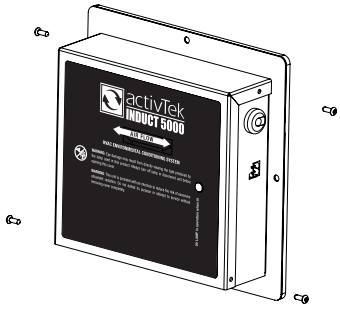

7. Replace Cover and secure with the original four (4) screws.

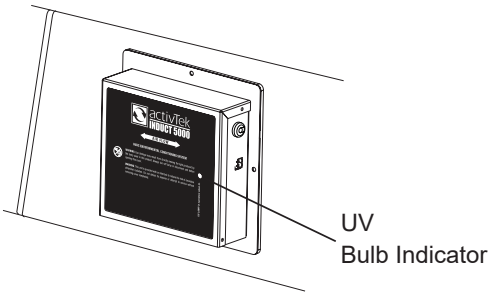

8. Re-install unit if removed from duct. Reconnect power and check for proper operation.

NOTE: UV Bulb Indicator should be lit when in operation.

For questions about maintenance, please contact your Sales Representative or Customer Service at 866.736.0503 or email aessupport@activepure.com.

REPLACEMENT PARTS & SERVICE

WARNING

Use only replacement parts recommended by the manufacturer.

REPLACEMENT PARTS FOR INDUCT 5000 OR 10000	PART NUMBER
ActivePure® Cell Assembly (No Ozone) - 14” **NOTE: Induct 10000 requires (2) 14” ActivePure Cell Assemblies**	US71089
Ballast	9950255

Induct 5000 w/ Relay Port

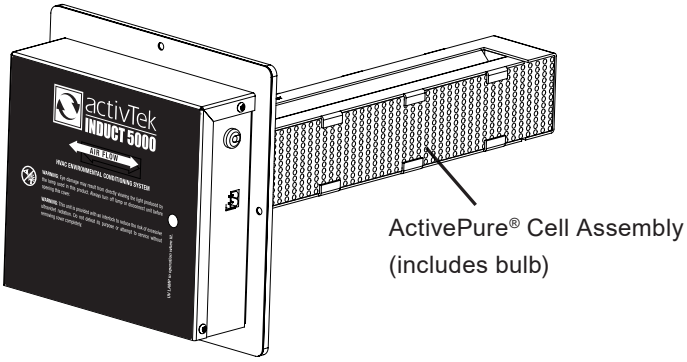

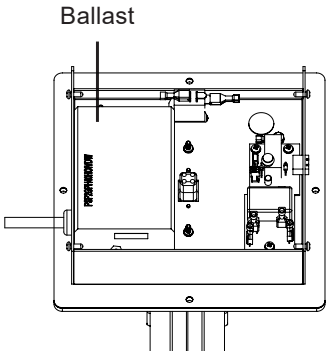

Induct 10000 w/ Relay Port

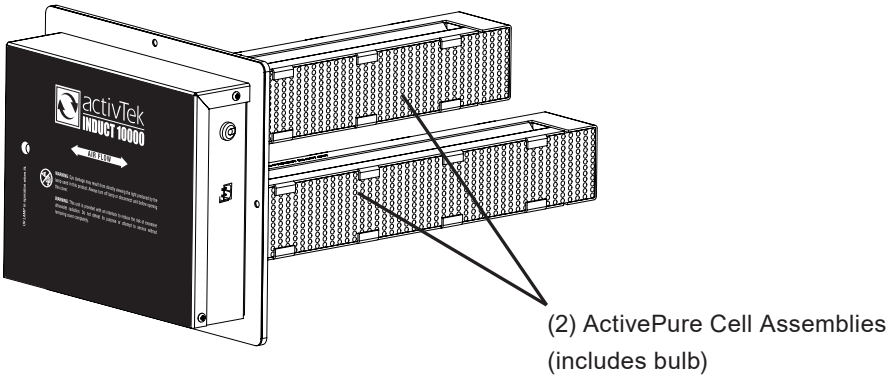

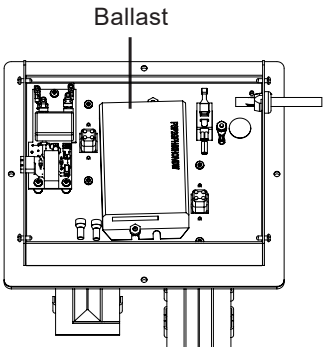

NOTE: Two ActivePure Cell Assemblies are needed for the Induct 10000.

For replacement parts, please contact your Sales Representative or Customer Service at 866.736.0503 or email aessupport@activepure.com.

WARRANTY INFORMATION

Limited Five (5) Year Warranty

To register your Induct 5000 and 10000 w/ Relay Port unit, please contact Customer Service at 866.736.0503 or email aessupport@activepure.com.

Customer should not repackage and ship these Induct units due to possibility of irreparable damage. For questions on warranty service, please contact your Sales Representative or Customer Service at 866.736.0503 or email aessupport@activepure.com.

WHAT IS COVERED BY THIS WARRANTY

We warrant the Induct 5000 and 10000 w/ Relay Port units to the Customer, subject to the conditions below, against defects in workmanship or material, provided that the products are returned to an authorized AES location within the following time periods:

- Induct 5000 and 10000 w/ Relay Port (excluding the ActivePure® Cell Assembly) within five (5) years of date of purchase.
- ActivePure® Cell Assembly (Qty 2 for Induct 10000) within (12) months of date of purchase if the Induct 5000 or 10000 w/ Relay Port is connected to a power source where the ActivePure® Cell Assembly is “ON” 100% of the time. If the Induct 5000 or 10000 w/ Relay Port is connected to the fan circuit where the ActivePure® Cell Assembly cycles “ON and OFF” with the system fan, the ActivePure® Cell Assembly is only covered by a ninety (90) day warranty from date of purchase.

INSTALLATION AND MAINTENANCE REQUIREMENTS

This warranty is expressly conditioned upon proper installation, operation, cleaning and maintenance, all in accordance with the Owner’s Manual. Failure to meet any of these requirements will void this warranty. Servicing of your Induct 5000 and 10000 w/ Relay Port by parties other than an authorized AES Representative and/or using parts other than genuine parts will also void this warranty.

This warranty is contingent upon:

- Registration of the product through the approved methods listed above
- Replacing the ActivePure Cell Assembly (Qty 2 for Induct 10000) once every (12) months with a genuine ActivePure part (proof of change required)

HOW TO OBTAIN WARRANTY SERVICE

Customer must register their Induct 5000 and 10000 w/ Relay Port by contacting Customer Service at 866.736.0503 or email aessupport@activepure.com and provide proof of purchase (including purchase date) within the above time periods. We will repair or replace and return the product, without charge and within a reasonable period of time, subject to the conditions herein, if its examination shall disclose any part to be defective in workmanship or material. If we, in our discretion, are unable to repair the product after a reasonable number of attempts, we will provide either a refund of the purchase price or a replacement unit, at the company’s option. We reserve the right to inspect and/or require confirmation of installation method.

WHAT IS NOT COVERED BY THIS WARRANTY

Ordinary wear and tear shall not be considered a defect in workmanship or material. These warranties do not apply to loss or damage caused by accident, fire, abuse, misuse, improper installation, modification, misapplication, ailure to maintain the product as provided herein, or by any repairs other than those provided by an authorized AES location. This warranty is non-transferable.

UNAUTHORIZED CHANNELS & MISSING SERIAL NUMBERS

If a valid serial number is missing from the product, the warranty will be voided. AES products are authorized for sale through authorized AES Sales Representatives only. Warranties are voided if a product is purchased through unauthorized channels; this includes websites that are not authorized to sell our products OR use AES trademarked names, images and logos as well as Internet auction sites (e.g. eBay and Craigslist). The only approved Internet presence for activTek products is airscrubber.com. To confirm warranty coverage prior to purchasing a product, please contact your Sales Representative or Customer Service at 866-736-0503 or email aessupport@activepure.com with the serial number located on the unit.

EXCLUSION OF OTHER WARRANTIES AND CONDITIONS

EXCEPT AS PROVIDED HEREIN, AND TO THE EXTENT CONSISTENT WITH APPLICABLE LAWS, WE MAKE NO REPRESENTATION OR WARRANTY OF ANY KIND. ALL OTHER WARRANTIES OF ANY KIND, EXPRESS OR IMPLIED, ARE HEREBY EXPRESSLY DISCLAIMED, INCLUDING ANY IMPLIED WARRANTY OF MERCHANTABILITY OR FITNESS FOR A PARTICULAR PURPOSE.

LIMITATION OF LIABILITY FOR SPECIAL, INCIDENTAL OR CONSEQUENTIAL DAMAGES

TO THE EXTENT CONSISTENT WITH APPLICABLE LAWS, WE SHALL NOT IN ANY CASE BE LIABLE FOR SPECIAL, INCIDENTAL OR CONSEQUENTIAL DAMAGES ARISING FROM BREACH OF EXPRESSED OR IMPLIED WARRANTIES, CONDITIONS, GUARANTEES OR REPRESENTATIONS, BREACH OF CONTRACT, NEGLIGENCE OR ANY OTHER LEGAL THEORY. Such excluded damages include, but are not limited to, loss of profits or revenue, and loss of the use of the products, and any loss caused by leaks or other water damage.

FOR U.S. APPLICATION ONLY

This warranty gives you specific legal rights, and you may also have other rights which vary from state to state. Some states do not allow limitations on warranties, or on remedies for breach. In such states, the above limitations may not apply to you.

FOR CANADIAN APPLICATION ONLY

Exclusion of Subsequent Owners: Except as otherwise required by applicable legislation, this warranty is not transferable. This warranty gives you specific legal rights and you may also have other rights which vary from province to province. Some provinces and territories do not allow limitations on warranties, or on remedies for breach. In such provinces or territories, the above limitations may not apply to you.

If any provision of this warranty or part thereof is held by a court of competent jurisdiction to be invalid, illegal, or unenforceable, the validity, legality and enforceability of the remaining provisions or parts thereof will not in any way be affected or impaired within the jurisdiction of that court. This entire warranty shall continue to be valid, legal and enforceable in any jurisdiction where a similar determination has not been made.

This warranty is provided by:

ActivePure Enterprise Solutions, LLC
1300 Valley Drive
Bristol, VA 24201

SERVICE

Every effort is made to ensure customers receive an up-to-date owner’s manual on the use of our products; however, from time to time, modifications to our products may without notice make the information contained herein subject to alteration. For the latest information, please view the owner’s manual at airscrubber.com/manuals.

FCC DECLARATION & RESPONSIBLE PARTY

This equipment has been tested and found to comply with the limits for a Class B digital device, pursuant of Part 15 of the FCC Rules. These limits are designed to provide reasonable protection against harmful interference in a residential installation. This equipment generates, uses, and can radiate radio frequency energy, and if not installed and used in accordance with the instructions, may cause harmful interference to radio communications. However, there is no guarantee that interference will not occur in a particular installation. If this equipment does cause harmful interference to radio or television, which can be determined by turning the equipment off and on, the user is encouraged to try to correct the interference by one or more of the following measures:

- Reorient or relocate the receiving antenna.
- Increase the separation between the equipment and receiver.
- Connect the equipment into an outlet on a circuit different from that to which the receiver is connected.
- Consult the Independent Contractor for help.

FCC Declaration of Conformity

Name: Induct 5000 w/ Relay Port
Induct 10000 w/ Relay Port

Model: A1024E (Induct 5000)
A1025E (Induct 10000)

Produced by: ActivePure Manufacturing, LLC

This device complies with Part 15 of the FCC Rules.

Responsible Party

ActivePure Manufacturing, LLC
1300 Valley Drive
Bristol, VA 24201

Ph: 866.736.0503

Signature: _____

Printed Name: Andrew Eide

Title: Vice President of Product Development and Manufacturing

Date: 06/25/2025

For information regarding the use of this product, please contact Customer Service.

866.736.0503

aessupport@activepure.com

ActivePure Enterprise Solutions, LLC | 1300 Valley Drive | Bristol, VA 24201 | 866.736.0503

© 2025 ActivePure Enterprise Solutions, LLC. All Rights Reserved

ID_OM_5K-10K_65-00798_VA-01503C